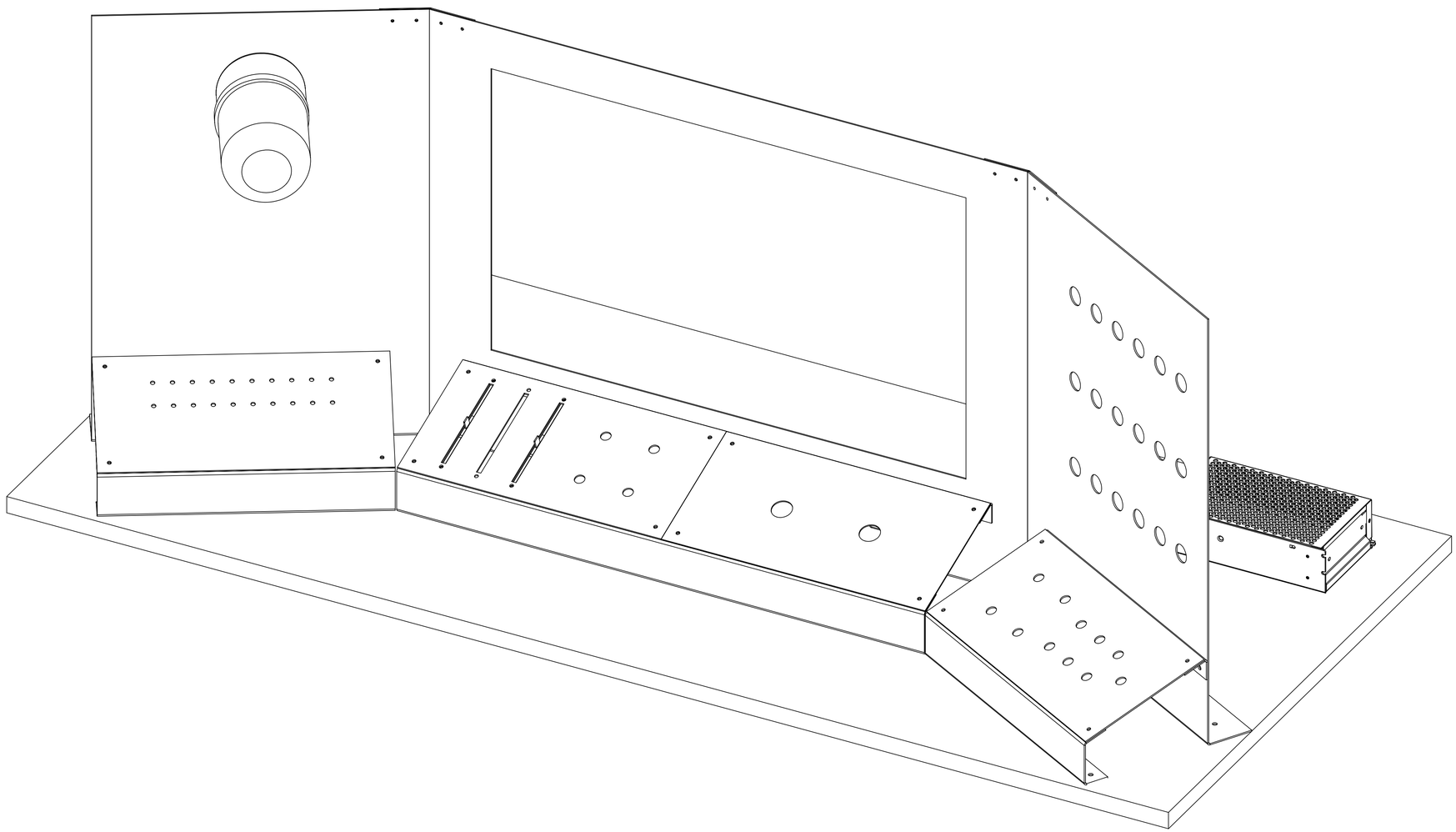

UNLESS OTHERWISE SPECIFIED:		NAME	DATE
DIMENSIONS ARE IN MM	DRAWN	DJO639	04/04/26
TOLERANCES: MACH ±0.1 mm BEND ±0.25 deg	CHECKED		
	ENG APPR.		
	MFG APPR.		
INTERPRET GEOMETRIC TOLERANCING PER: -	Q.A.		
MATERIAL Aluminum 5052-H32	COMMENTS:		
FINISH -			
DO NOT SCALE DRAWING			

PROPRIETARY AND CONFIDENTIAL
THE INFORMATION CONTAINED IN THIS DRAWING IS THE SOLE PROPERTY OF THE FISSION VISION CAPSTONE GROUP. ANY REPRODUCTION IN PART OR AS A WHOLE WITHOUT THE WRITTEN PERMISSION OF THE FISSION VISION CAPSTONE GROUP IS PROHIBITED.

UNIVERSITY OF SASKATCHEWAN - "FISSION VISION" ENGINEERING CAPSTONE GROUP

TITLE:
Nuclear Reactor Simulator Case

SIZE	DWG. NO.	REV
D	SIM_OVERVIEW_001	1.0

SCALE: 1:5 WEIGHT: SHEET 1 OF 2

SOLIDWORKS Educational Product. For Instructional Use Only.

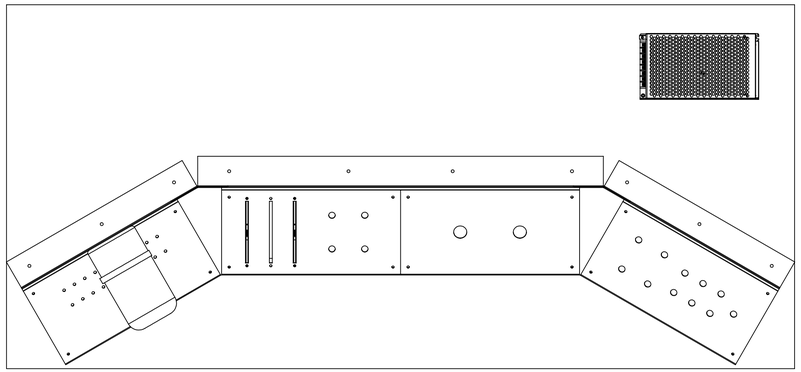

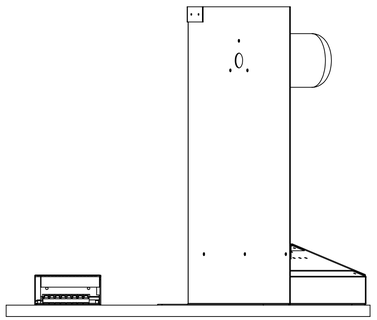

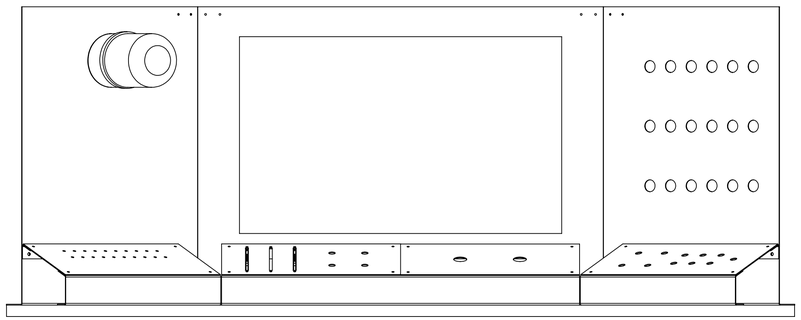

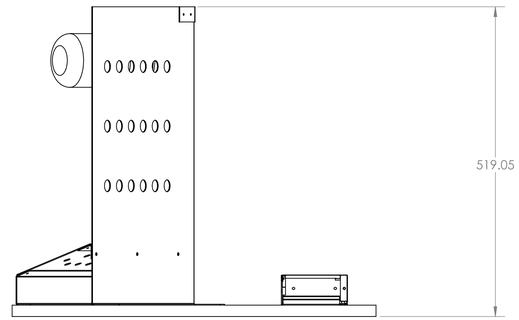

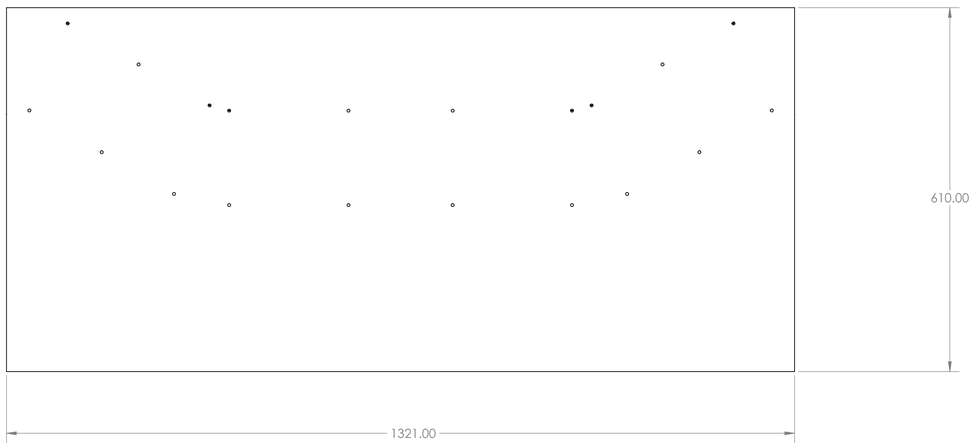

PROPRIETARY AND CONFIDENTIAL
THE INFORMATION CONTAINED IN THIS DRAWING IS THE SOLE PROPERTY OF THE FISSION VISION CAPSTONE GROUP. ANY REPRODUCTION IN PART OR AS A WHOLE WITHOUT THE WRITTEN PERMISSION OF THE FISSION VISION CAPSTONE GROUP IS PROHIBITED.

UNLESS OTHERWISE SPECIFIED:		NAME	DATE	UNIVERSITY OF SASKATCHEWAN - "FISSION VISION" ENGINEERING CAPSTONE GROUP
DIMENSIONS ARE IN MM	DRAWN	DJO639	04/04/26	TITLE:
TOLERANCES: MACH ±0.1 mm BEND ±0.25 deg	CHECKED			Nuclear Reactor Simulator Case
	ENG APPR.			
	MFG APPR.			
INTERPRET GEOMETRIC TOLERANCING PER: -	Q.A.			
MATERIAL Aluminum 5052-H32	COMMENTS:			
FINISH -				
DO NOT SCALE DRAWING				SIZE D · DWG. NO. SIM_OVERVIEW_002 · REV 1.0
				SCALE: 1:5 · WEIGHT: · SHEET 2 OF 2

SOLIDWORKS Educational Product. For Instructional Use Only.

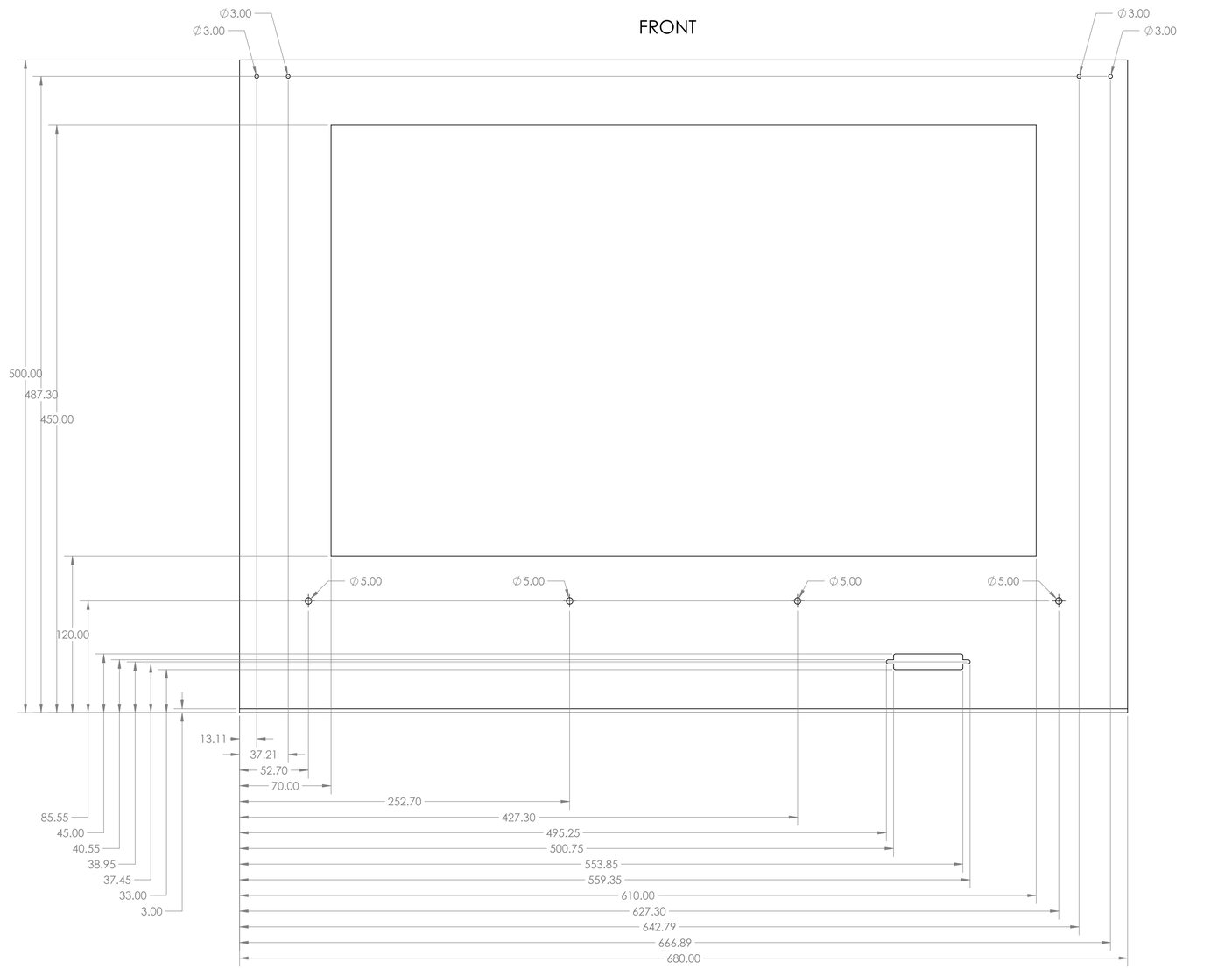

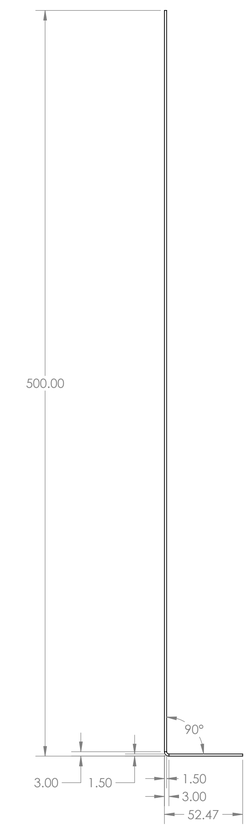

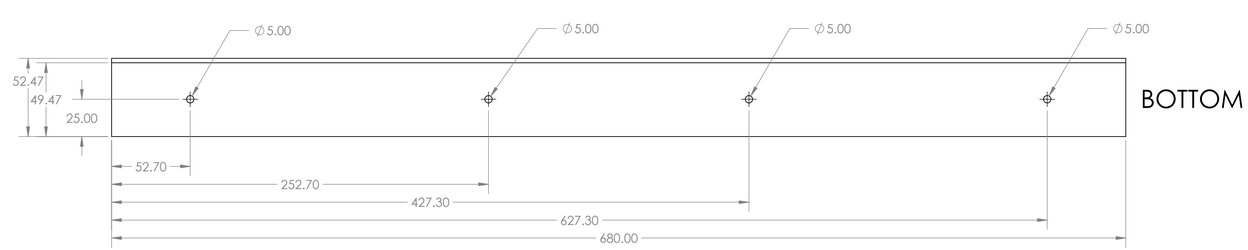

UNLESS OTHERWISE SPECIFIED:		NAME	DATE
DIMENSIONS ARE IN MM	DRAWN	DJO639	04/04/26
TOLERANCES: MACH±0.01 mm BEND ±0.25 deg	CHECKED		
	ENG APPR.		
	MFG APPR.		
INTERPRET GEOMETRIC TOLERANCING PER: -	Q.A.		
MATERIAL Aluminum 5052-H32	COMMENTS:		
FINISH -			
DO NOT SCALE DRAWING			

UNIVERSITY OF SASKATCHEWAN - "FISSION VISION" ENGINEERING CAPSTONE GROUP

TITLE: Nuclear Reactor Simulator Case

SIZE D | DWG. NO. SIM_CNTR_001 | REV 1.0

SCALE: 1:2 | WEIGHT: | SHEET 1 OF 1

PROPRIETARY AND CONFIDENTIAL
THE INFORMATION CONTAINED IN THIS DRAWING IS THE SOLE PROPERTY OF THE FISSION VISION CAPSTONE GROUP. ANY REPRODUCTION IN PART OR AS A WHOLE WITHOUT THE WRITTEN PERMISSION OF THE FISSION VISION CAPSTONE GROUP IS PROHIBITED.

SOLIDWORKS Educational Product. For Instructional Use Only.

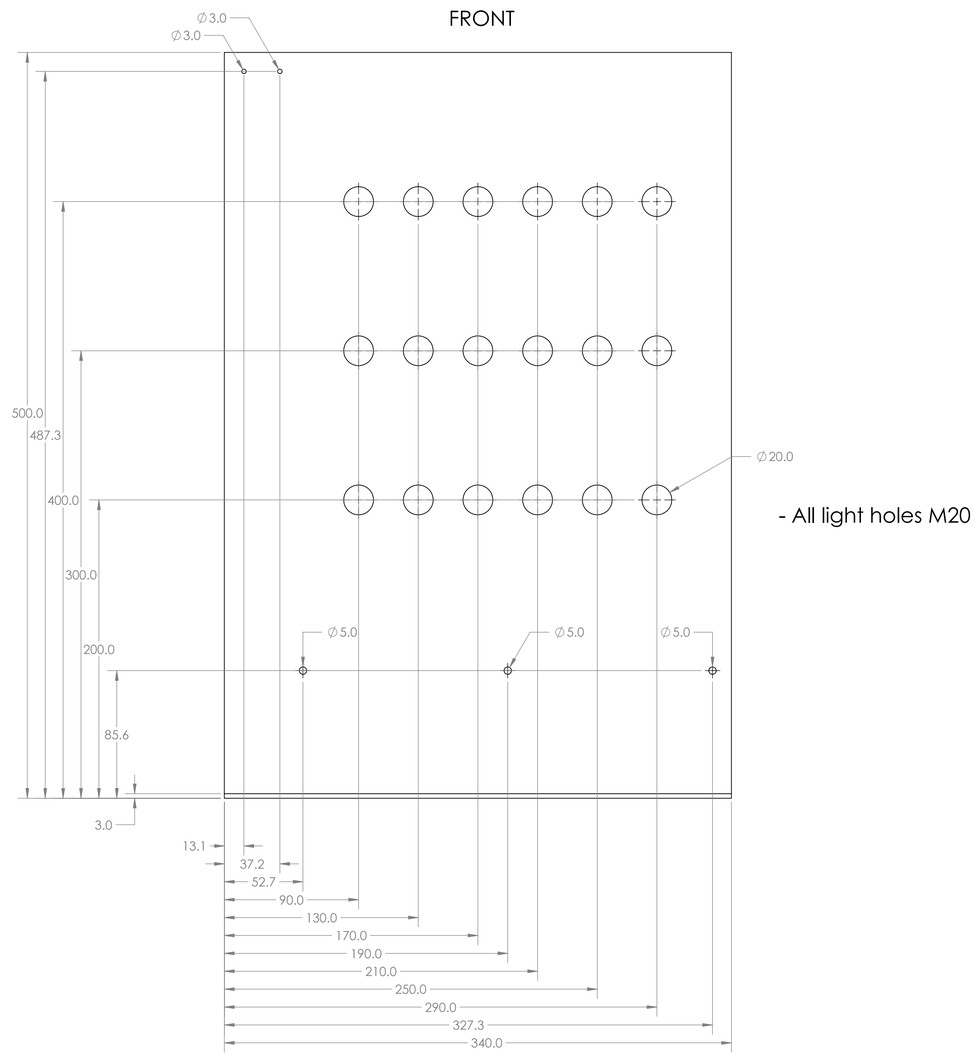

- All light holes M20

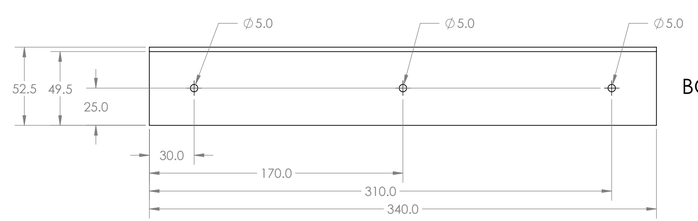

PROPRIETARY AND CONFIDENTIAL
THE INFORMATION CONTAINED IN THIS DRAWING IS THE SOLE PROPERTY OF THE FISSION VISION CAPSTONE GROUP. ANY REPRODUCTION IN PART OR AS A WHOLE WITHOUT THE WRITTEN PERMISSION OF THE FISSION VISION CAPSTONE GROUP IS PROHIBITED.

UNLESS OTHERWISE SPECIFIED:
DIMENSIONS ARE IN MM
TOLERANCES:
MACH±0.01 mm
BEND ±0.25 deg
INTERPRET GEOMETRIC TOLERANCING PER: -
MATERIAL: Aluminum 5052-H32
FINISH: -
DO NOT SCALE DRAWING

	NAME	DATE
DRAWN	DJO639	04/04/26
CHECKED		
ENG APPR.		
MFG APPR.		
Q.A.		

COMMENTS:

UNIVERSITY OF SASKATCHEWAN - "FISSION VISION" ENGINEERING CAPSTONE GROUP

TITLE:
Nuclear Reactor Simulator Case

SIZE	DWG. NO.	REV
D	SIM_WING_RIGHT_001	1.0

SCALE: 1:2 WEIGHT: SHEET 1 OF 1

SOLIDWORKS Educational Product. For Instructional Use Only.

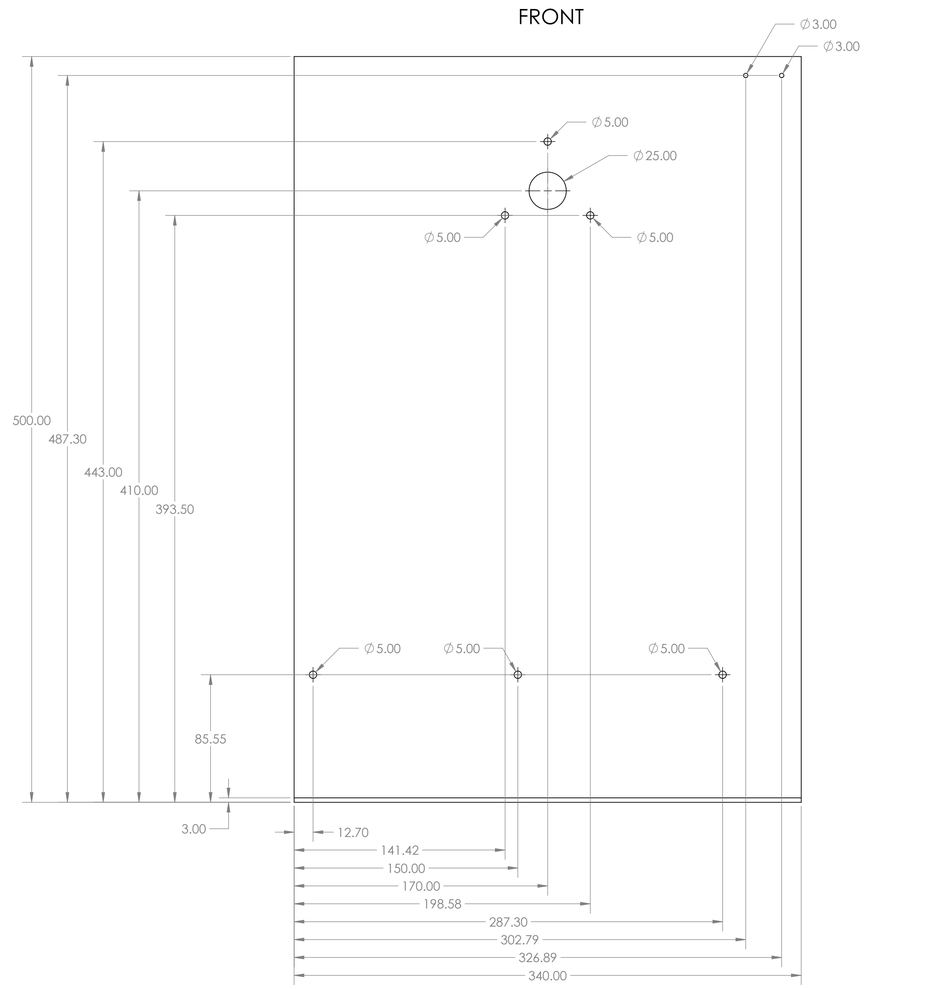

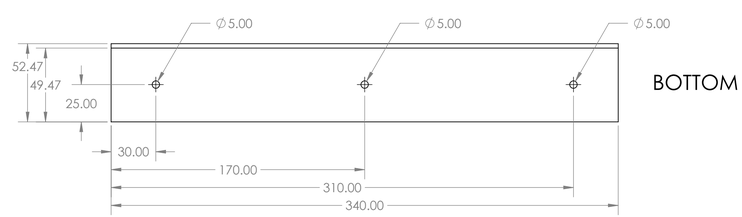

BOTTOM

PROPRIETARY AND CONFIDENTIAL

THE INFORMATION CONTAINED IN THIS DRAWING IS THE SOLE PROPERTY OF THE FISSION VISION CAPSTONE GROUP. ANY REPRODUCTION IN PART OR AS A WHOLE WITHOUT THE WRITTEN PERMISSION OF THE FISSION VISION CAPSTONE GROUP IS PROHIBITED.

UNLESS OTHERWISE SPECIFIED:		NAME	DATE
DIMENSIONS ARE IN MM	DRAWN	DJO639	04/04/26
TOLERANCES: MACH ±0.01 mm BEND ±0.25 deg	CHECKED		
	ENG APPR.		
	MFG APPR.		
INTERPRET GEOMETRIC TOLERANCING PER: -	Q.A.		
MATERIAL Aluminum 5052-H32	COMMENTS:		
FINISH -			
DO NOT SCALE DRAWING			

UNIVERSITY OF SASKATCHEWAN - "FISSION VISION" ENGINEERING CAPSTONE GROUP

TITLE:

Nuclear Reactor Simulator Case

SIZE	DWG. NO.	REV
D	SIM_WING_LEFT_001	1.0

SCALE: 1:2 WEIGHT: SHEET 1 OF 1

SOLIDWORKS Educational Product. For Instructional Use Only.

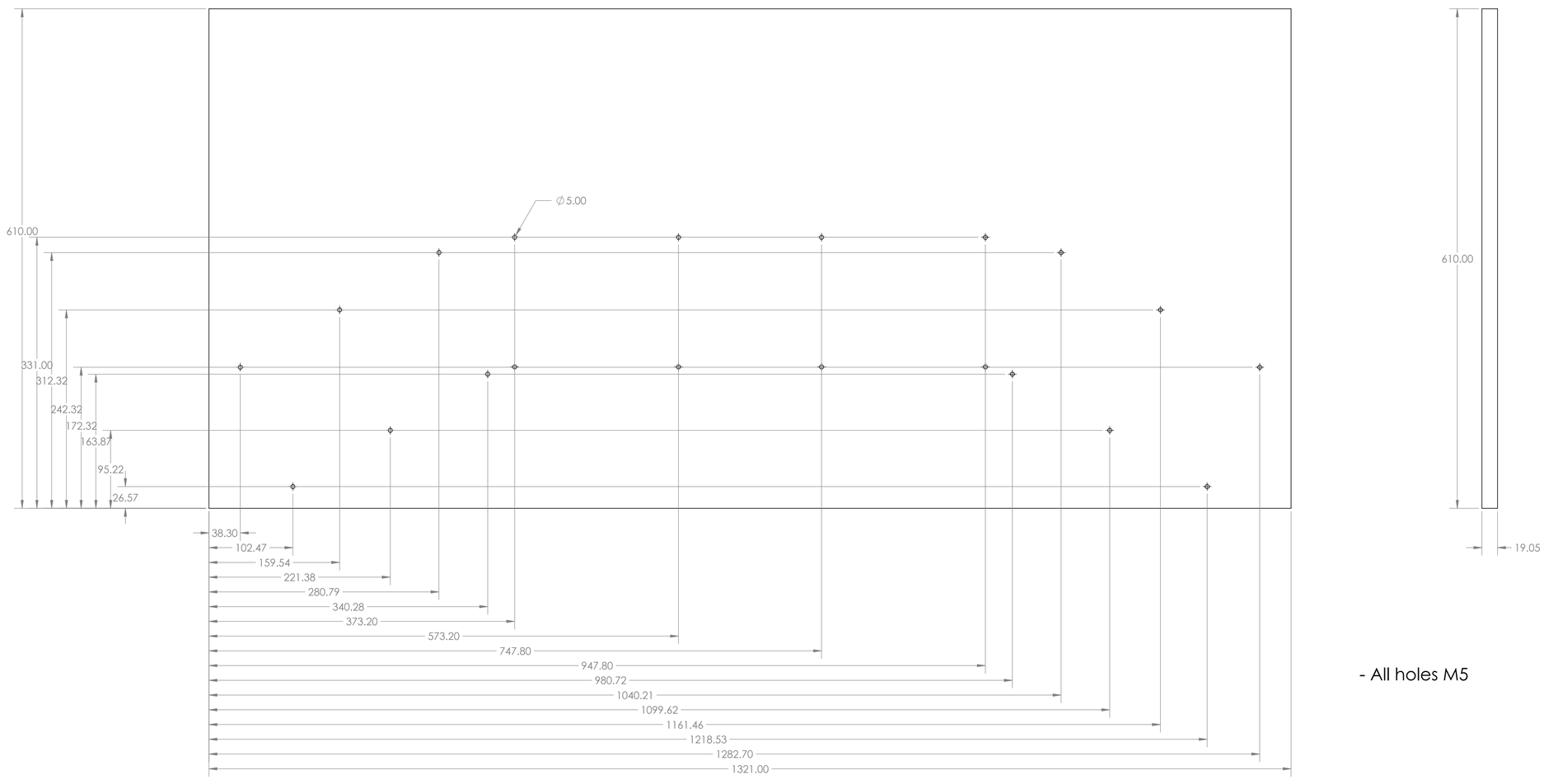

- All holes M5

UNLESS OTHERWISE SPECIFIED:		NAME	DATE
DIMENSIONS ARE IN MM	DRAWN	DJO639	04/04/26
TOLERANCES: MACH ±0.01 mm BEND ±0.25 deg	CHECKED		
	ENG APPR.		
	MFG APPR.		
INTERPRET GEOMETRIC TOLERANCING PER: -	Q.A.		
MATERIAL Plywood or similar	COMMENTS:		
FINISH -			
DO NOT SCALE DRAWING			

UNIVERSITY OF SASKATCHEWAN - "FISSION VISION" ENGINEERING CAPSTONE GROUP

TITLE: Nuclear Reactor Simulator Case

SIZE D | DWG. NO. SIM_BASE_001 | REV 1.0

SCALE: 1:5 | WEIGHT: | SHEET 1 OF 1

PROPRIETARY AND CONFIDENTIAL
THE INFORMATION CONTAINED IN THIS DRAWING IS THE SOLE PROPERTY OF THE FISSION VISION CAPSTONE GROUP. ANY REPRODUCTION IN PART OR AS A WHOLE WITHOUT THE WRITTEN PERMISSION OF THE FISSION VISION CAPSTONE GROUP IS PROHIBITED.

SOLIDWORKS Educational Product. For Instructional Use Only.

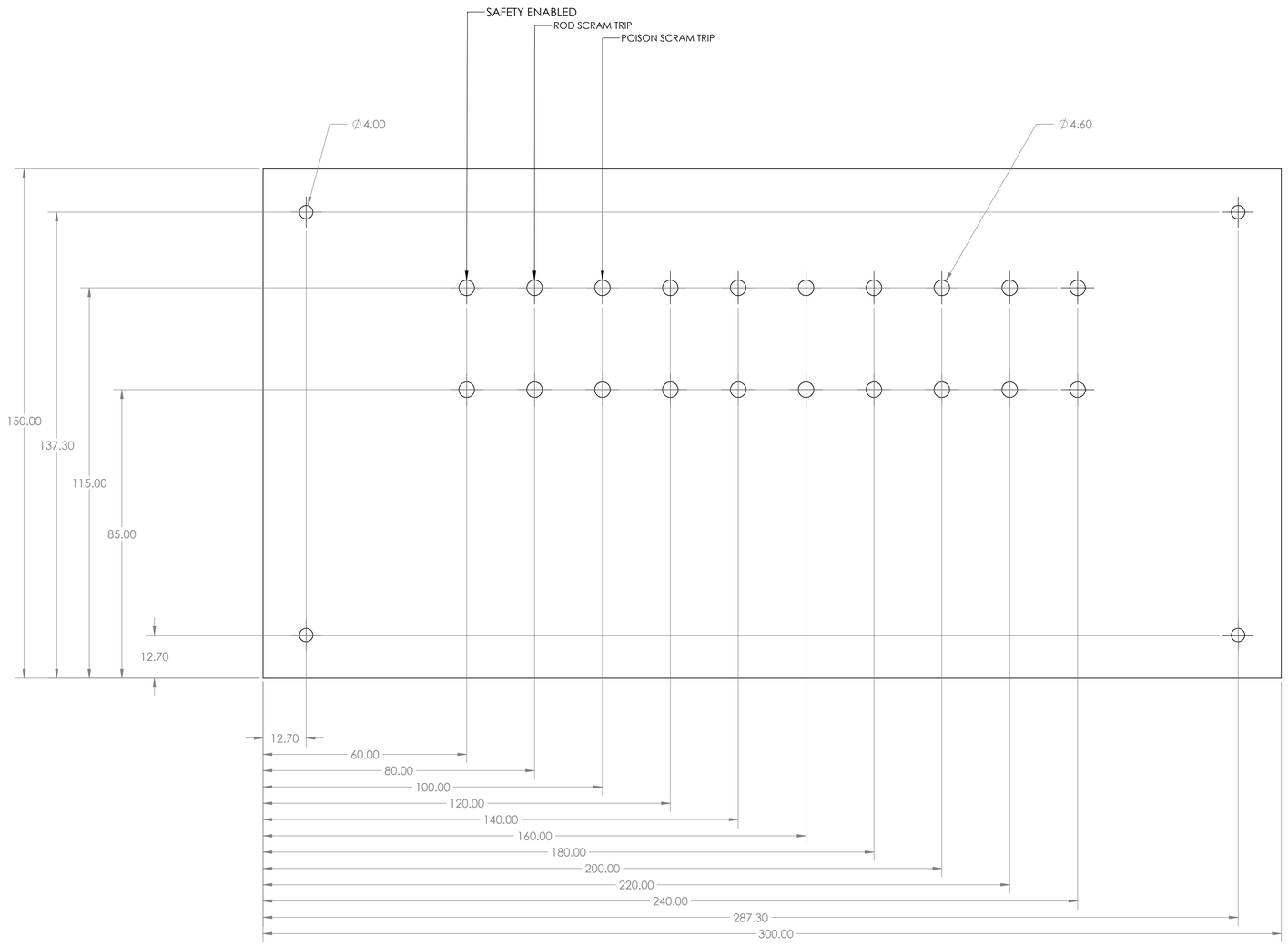

- Corner holes M4
- LED holes M4.6

UNLESS OTHERWISE SPECIFIED:		NAME	DATE
DIMENSIONS ARE IN MM	DRAWN	DJO639	04/04/26
TOLERANCES: MACH ±0.01 mm BEND ±0.25 deg	CHECKED		
	ENG APPR.		
	MFG APPR.		
INTERPRET GEOMETRIC TOLERANCING PER: -	Q.A.		
MATERIAL Aluminum 5052-H32	COMMENTS:		
FINISH -			
DO NOT SCALE DRAWING			

UNIVERSITY OF SASKATCHEWAN - FISSION VISION® ENGINEERING CAPSTONE GROUP

TITLE: Nuclear Reactor Simulator Case

SIZE D | DWG. NO. SIM_ALARM_PNL_001 | REV 1.0

SCALE: 1:1 | WEIGHT: | SHEET 1 OF 1

PROPRIETARY AND CONFIDENTIAL

THE INFORMATION CONTAINED IN THIS DRAWING IS THE SOLE PROPERTY OF THE FISSION VISION CAPSTONE GROUP. ANY REPRODUCTION IN PART OR AS A WHOLE WITHOUT THE WRITTEN PERMISSION OF THE FISSION VISION CAPSTONE GROUP IS PROHIBITED.

SOLIDWORKS Educational Product. For Instructional Use Only.

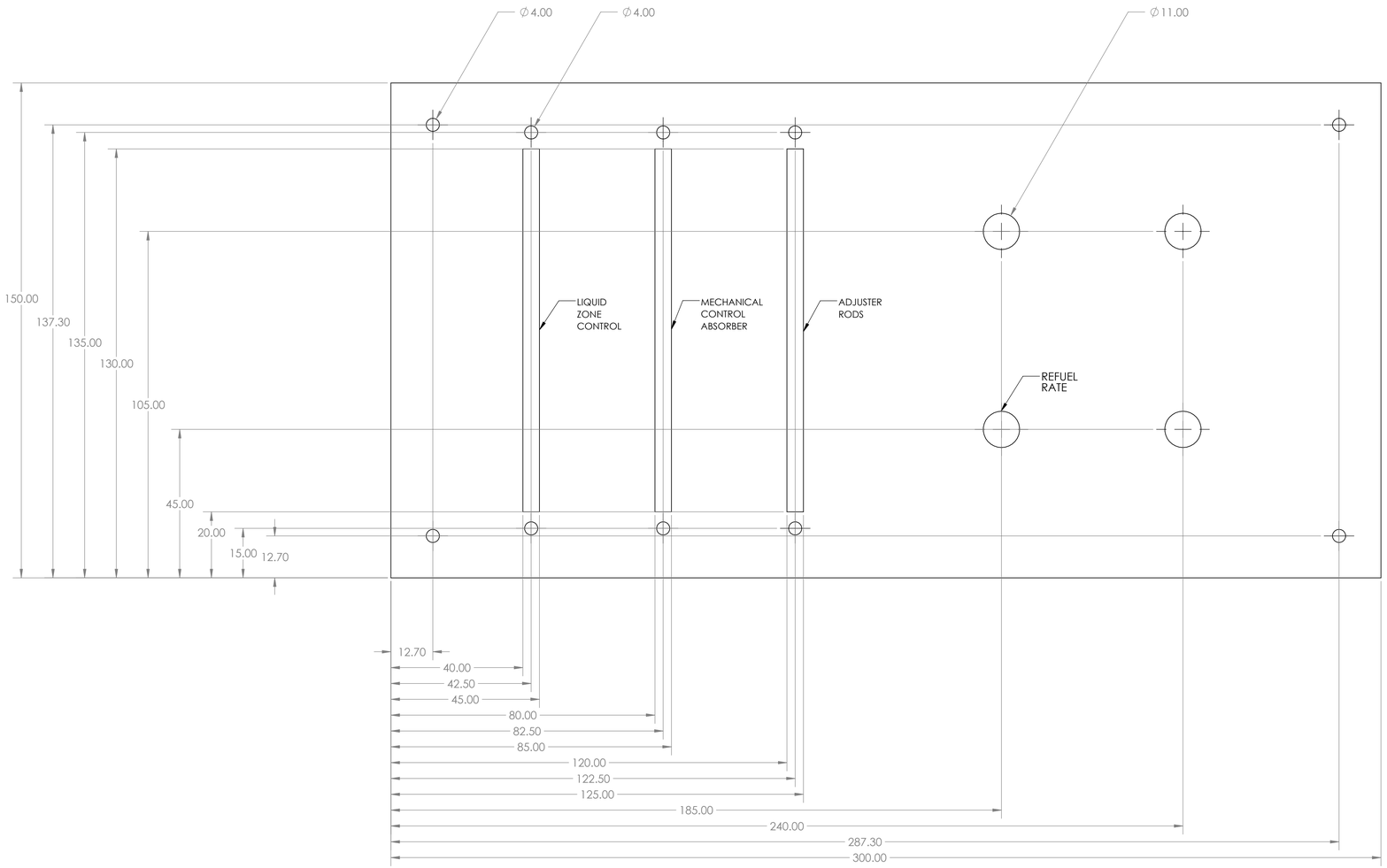

- Corner holes M4
- Slider mounting holes M4
- Dial holes M11

PROPRIETARY AND CONFIDENTIAL
THE INFORMATION CONTAINED IN THIS DRAWING IS THE SOLE PROPERTY OF THE FISSION VISION CAPSTONE GROUP. ANY REPRODUCTION IN PART OR AS A WHOLE WITHOUT THE WRITTEN PERMISSION OF THE FISSION VISION CAPSTONE GROUP IS PROHIBITED.

UNLESS OTHERWISE SPECIFIED:		NAME	DATE
DIMENSIONS ARE IN MM	DRAWN	DJO639	04/04/26
TOLERANCES: MACH±0.01 mm BEND ±0.25 deg	CHECKED		
	ENG APPR.		
	MFG APPR.		
INTERPRET GEOMETRIC TOLERANCING PER: -	Q.A.		
MATERIAL Aluminum 5052-H32	COMMENTS:		
FINISH -			
DO NOT SCALE DRAWING			

UNIVERSITY OF SASKATCHEWAN - "FISSION VISION" ENGINEERING CAPSTONE GROUP

TITLE:
Nuclear Reactor Simulator Case

SIZE	DWG. NO.	REV
D	SIM_REACTOR_PNL_001	1.0

SCALE: 1:1 WEIGHT: SHEET 1 OF 1

SOLIDWORKS Educational Product. For Instructional Use Only.

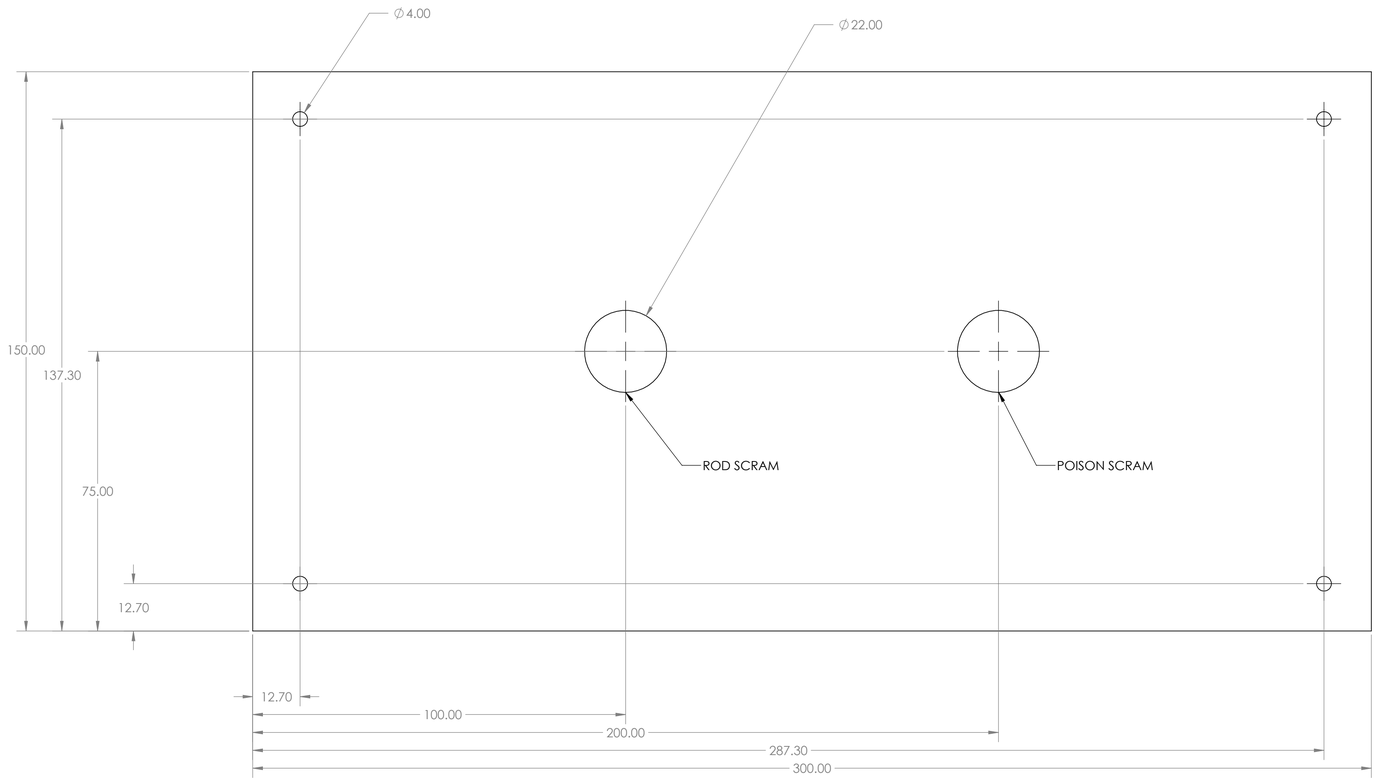

- Corner holes M4
- Switch holes M22

UNLESS OTHERWISE SPECIFIED:		NAME	DATE
DIMENSIONS ARE IN MM	DRAWN	DJO639	04/04/26
TOLERANCES: MACH ±0.01 mm BEND ±0.25 deg	CHECKED		
	ENG APPR.		
	MFG APPR.		
INTERPRET GEOMETRIC TOLERANCING PER: -	Q.A.		
MATERIAL Aluminum 5052-H32	COMMENTS:		
FINISH -			
DO NOT SCALE DRAWING			

UNIVERSITY OF SASKATCHEWAN - "FISSION VISION" ENGINEERING CAPSTONE GROUP

TITLE:

Nuclear Reactor Simulator Case

SIZE	DWG. NO.	REV
D	SIM_SCRAM_PNL_001	1.0
SCALE: 1:1	WEIGHT:	SHEET 1 OF 1

PROPRIETARY AND CONFIDENTIAL

THE INFORMATION CONTAINED IN THIS DRAWING IS THE SOLE PROPERTY OF THE FISSION VISION CAPSTONE GROUP. ANY REPRODUCTION IN PART OR AS A WHOLE WITHOUT THE WRITTEN PERMISSION OF THE FISSION VISION CAPSTONE GROUP IS PROHIBITED.

SOLIDWORKS Educational Product. For Instructional Use Only.

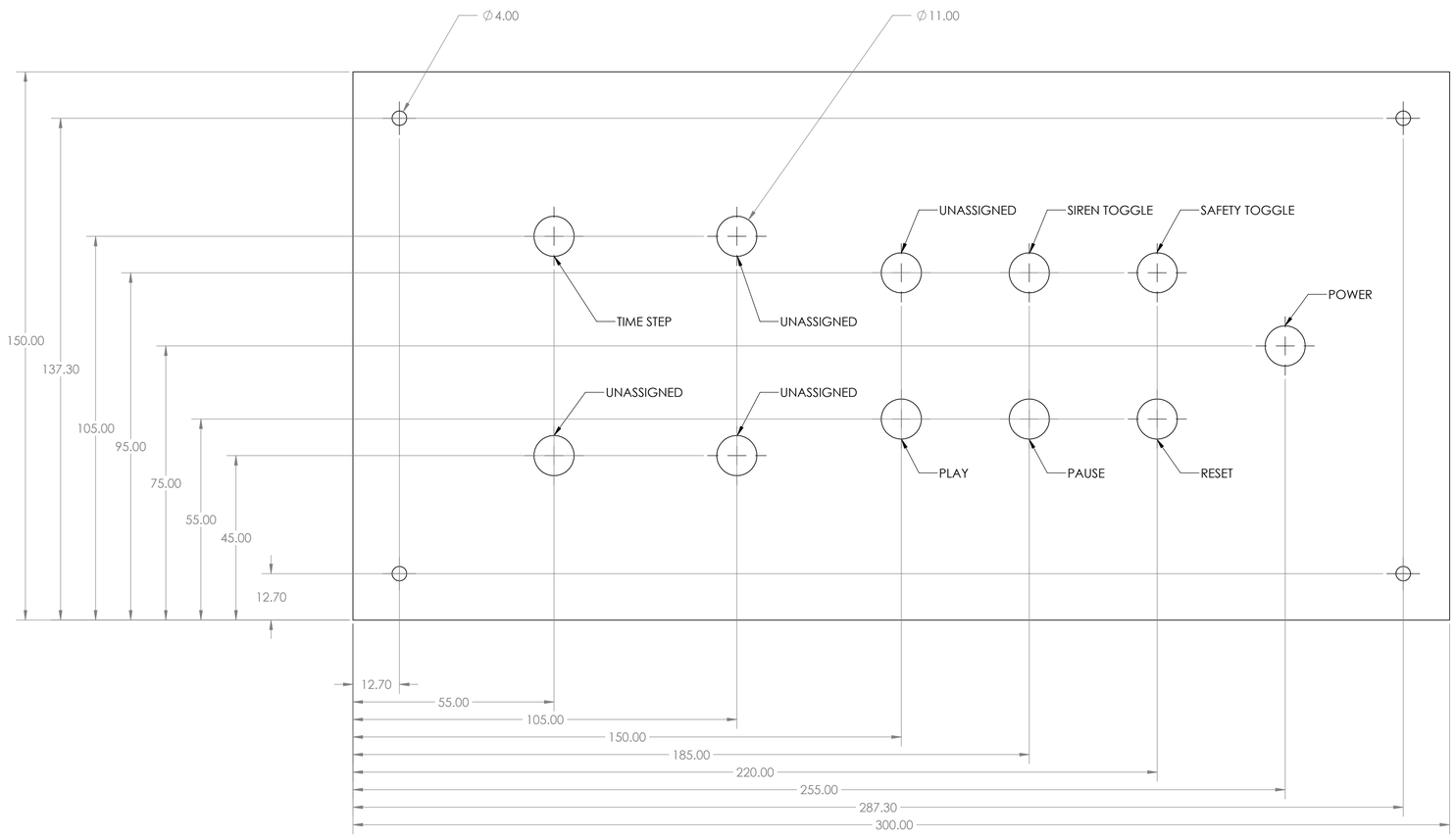

- Corner holes M4
- Dial holes M11
- Resize dial holes as required by selected switches

PROPRIETARY AND CONFIDENTIAL
THE INFORMATION CONTAINED IN THIS DRAWING IS THE SOLE PROPERTY OF THE FISSION VISION CAPSTONE GROUP. ANY REPRODUCTION IN PART OR AS A WHOLE WITHOUT THE WRITTEN PERMISSION OF THE FISSION VISION CAPSTONE GROUP IS PROHIBITED.

		NAME	DATE
UNLESS OTHERWISE SPECIFIED:			
DIMENSIONS ARE IN MM	DRAWN	DJO639	04/04/26
TOLERANCES: MACH±0.01 mm BEND ±0.25 deg	CHECKED		
	ENG APPR.		
	MFG APPR.		
INTERPRET GEOMETRIC TOLERANCING PER: -	Q.A.		
MATERIAL Aluminum 5052-H32	COMMENTS:		
FINISH -			
DO NOT SCALE DRAWING			

UNIVERSITY OF SASKATCHEWAN - "FISSION VISION" ENGINEERING CAPSTONE GROUP

TITLE: Nuclear Reactor Simulator Case

SIZE	DWG. NO.	REV
D	SIM_SIMCTRL_PNL_001	1.0
SCALE: 1:1	WEIGHT:	SHEET 1 OF 1

SOLIDWORKS Educational Product. For Instructional Use Only.

SIDE

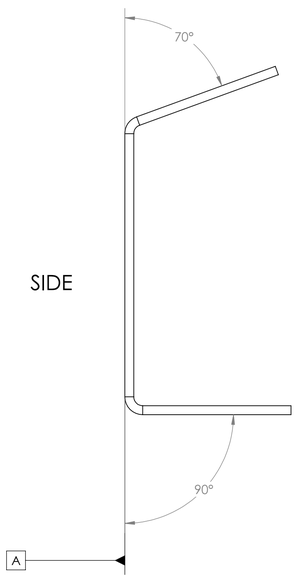

FLAT

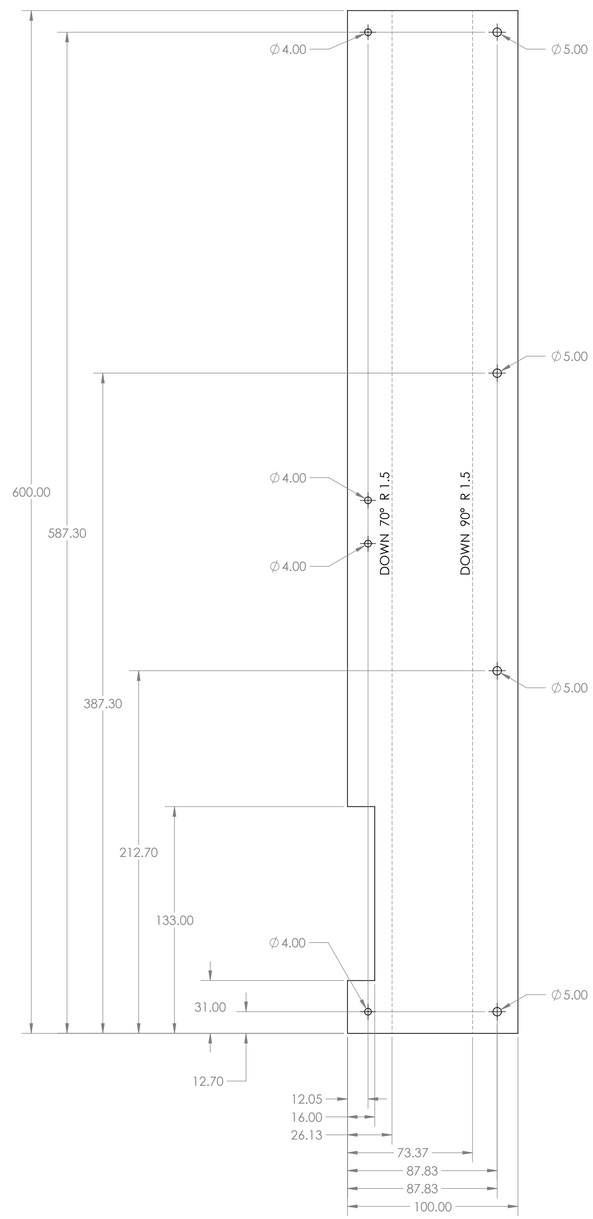

ISOMETRIC

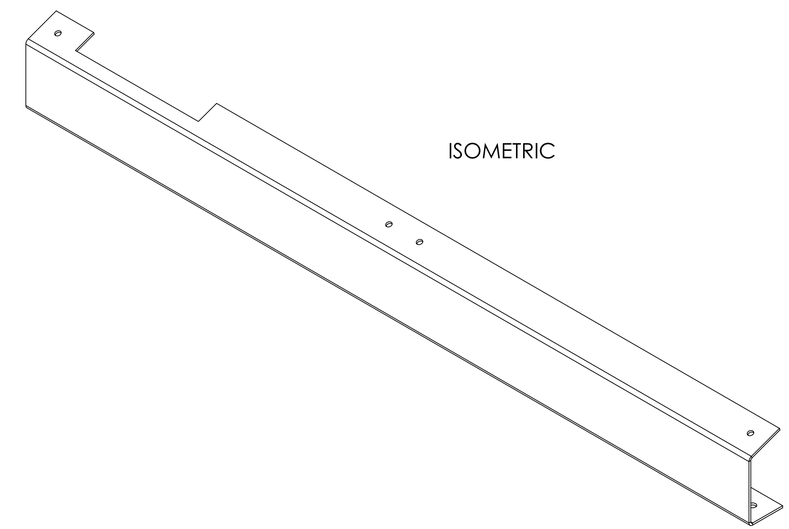

UNLESS OTHERWISE SPECIFIED:		NAME	DATE
DIMENSIONS ARE IN MM	DRAWN	DJO639	04/04/26
TOLERANCES: MACH±0.01 mm BEND ±0.25 deg	CHECKED		
	ENG APPR.		
	MFG APPR.		
INTERPRET GEOMETRIC TOLERANCING PER: -	Q.A.		
MATERIAL Aluminum 5052-H32	COMMENTS:		
FINISH -			
DO NOT SCALE DRAWING			

UNIVERSITY OF SASKATCHEWAN - "FISSION VISION" ENGINEERING CAPSTONE GROUP

TITLE:

Nuclear Reactor Simulator Case

SIZE	DWG. NO.	REV
D	SIM_PMNT_CTR_BTM_001	1.0
SCALE: 1:2	WEIGHT:	SHEET 1 OF 1

PROPRIETARY AND CONFIDENTIAL

THE INFORMATION CONTAINED IN THIS DRAWING IS THE SOLE PROPERTY OF THE FISSION VISION CAPSTONE GROUP. ANY REPRODUCTION IN PART OR AS A WHOLE WITHOUT THE WRITTEN PERMISSION OF THE FISSION VISION CAPSTONE GROUP IS PROHIBITED.

SOLIDWORKS Educational Product. For Instructional Use Only.

SIDE

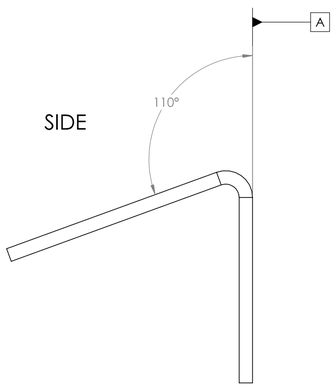

FLAT

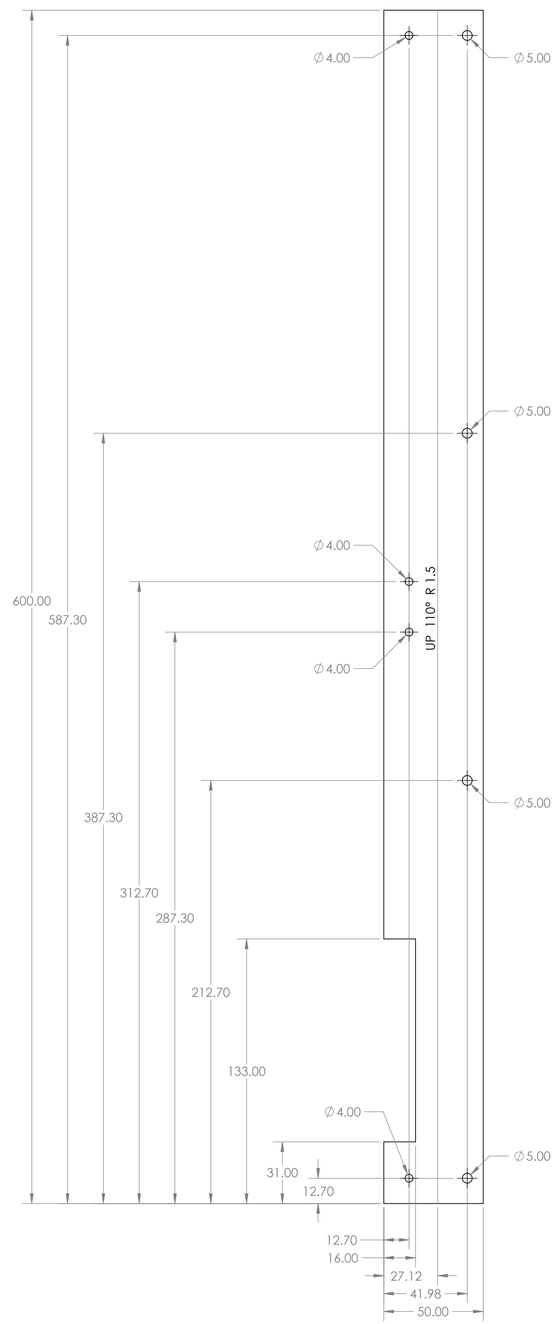

DIMETRIC

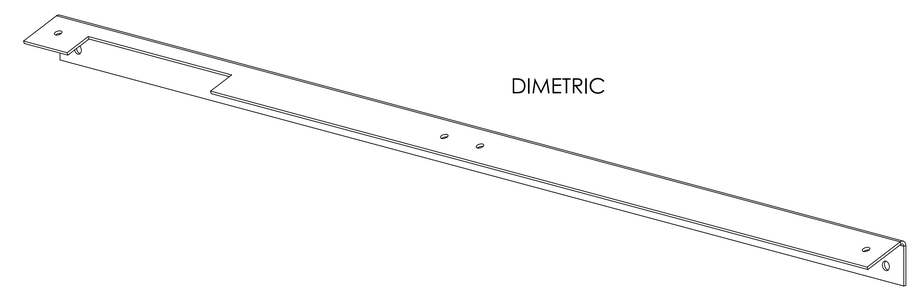

UNLESS OTHERWISE SPECIFIED:		NAME	DATE
DIMENSIONS ARE IN MM	DRAWN	DJO639	04/04/26
TOLERANCES: MACH ±0.01 mm BEND ±0.25 deg	CHECKED		
	ENG APPR.		
	MFG APPR.		
INTERPRET GEOMETRIC TOLERANCING PER: -	Q.A.		
MATERIAL Aluminum 5052-H32	COMMENTS:		
FINISH -			
DO NOT SCALE DRAWING			

UNIVERSITY OF SASKATCHEWAN - "FISSION VISION" ENGINEERING CAPSTONE GROUP

TITLE: Nuclear Reactor Simulator Case

SIZE D | DWG. NO. SIM_PMNT_CTR_TOP_001 | REV 1.0

SCALE: 1:2 | WEIGHT: | SHEET 1 OF 1

PROPRIETARY AND CONFIDENTIAL

THE INFORMATION CONTAINED IN THIS DRAWING IS THE SOLE PROPERTY OF THE FISSION VISION CAPSTONE GROUP. ANY REPRODUCTION IN PART OR AS A WHOLE WITHOUT THE WRITTEN PERMISSION OF THE FISSION VISION CAPSTONE GROUP IS PROHIBITED.

SOLIDWORKS Educational Product. For Instructional Use Only.

SIDE

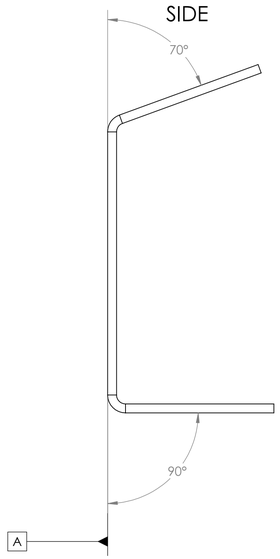

FLAT

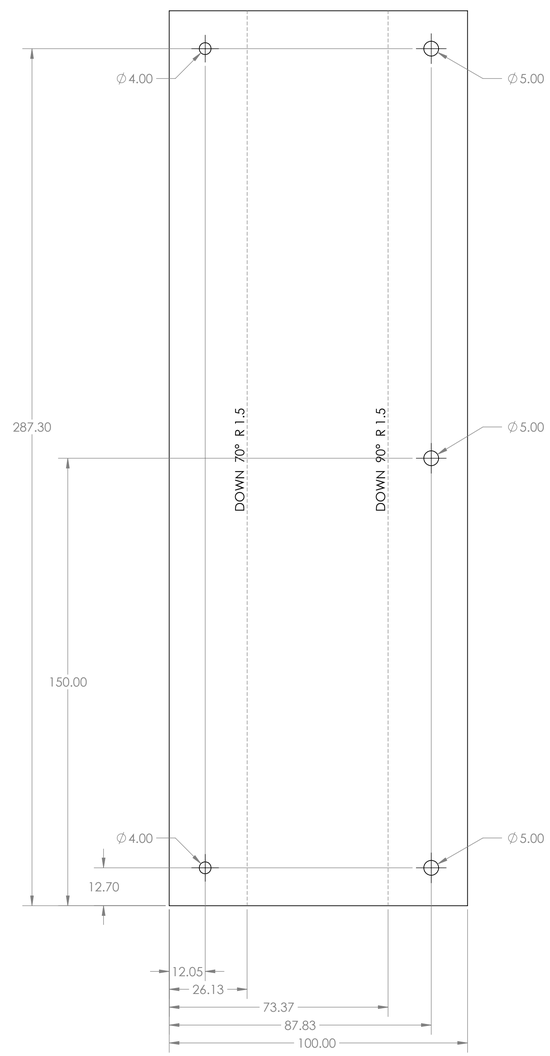

ISOMETRIC

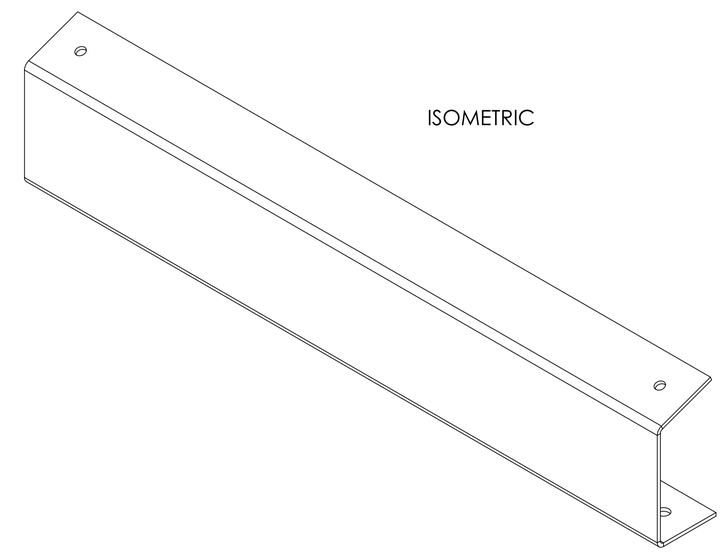

		NAME	DATE
UNLESS OTHERWISE SPECIFIED:			
DIMENSIONS ARE IN MM	DRAWN	DJO639	04/04/26
TOLERANCES: MACH ±0.01 mm BEND ±0.25 deg	CHECKED		
	ENG APPR.		
	MFG APPR.		
INTERPRET GEOMETRIC TOLERANCING PER: -	Q.A.		
MATERIAL Aluminum 5052-H32	COMMENTS:		
FINISH -			
DO NOT SCALE DRAWING			

UNIVERSITY OF SASKATCHEWAN - "FISSION VISION" ENGINEERING CAPSTONE GROUP

TITLE:

Nuclear Reactor Simulator Case

SIZE	DWG. NO.	REV
D	SIM_PMNT_W_BTM_001	1.0
SCALE: 1:1	WEIGHT:	SHEET 1 OF 1

PROPRIETARY AND CONFIDENTIAL

THE INFORMATION CONTAINED IN THIS DRAWING IS THE SOLE PROPERTY OF THE FISSION VISION CAPSTONE GROUP. ANY REPRODUCTION IN PART OR AS A WHOLE WITHOUT THE WRITTEN PERMISSION OF THE FISSION VISION CAPSTONE GROUP IS PROHIBITED.

SOLIDWORKS Educational Product. For Instructional Use Only.

SIDE

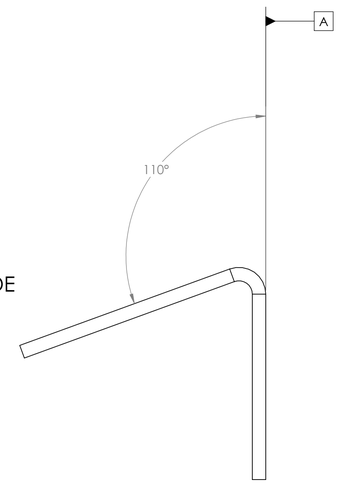

FLAT

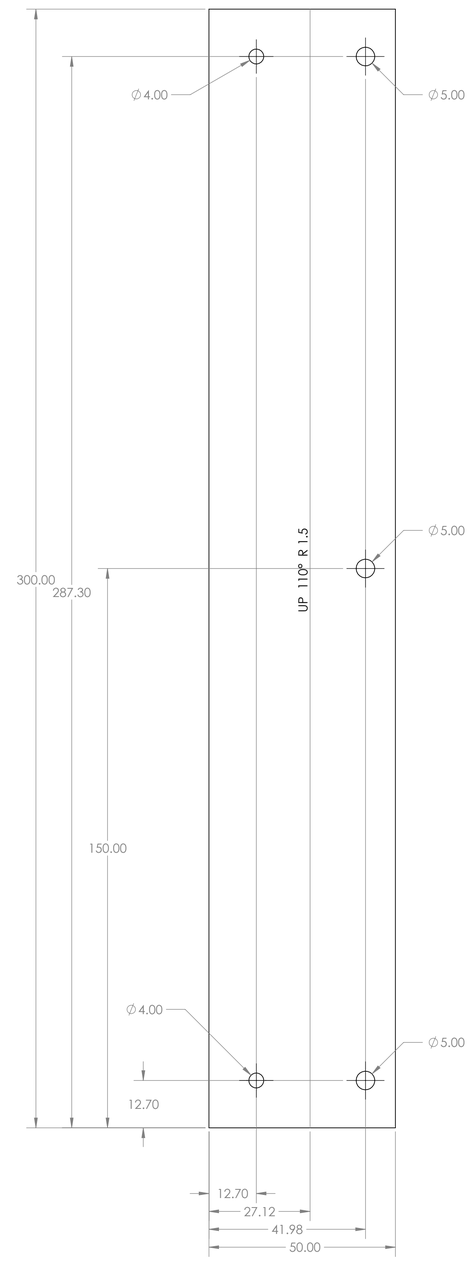

DIMETRIC

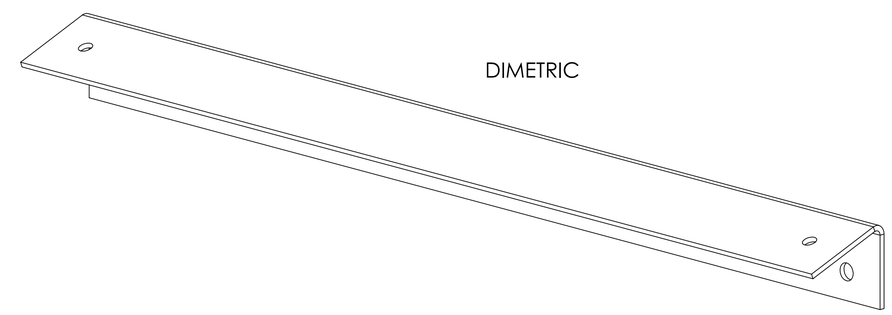

		NAME	DATE	
UNLESS OTHERWISE SPECIFIED:				UNIVERSITY OF SASKATCHEWAN - "FISSION VISION" ENGINEERING CAPSTONE GROUP
DIMENSIONS ARE IN MM	DRAWN	DJO639	04/04/26	TITLE:
TOLERANCES: MACH ±0.01 mm BEND ±0.25 deg	CHECKED			Nuclear Reactor Simulator Case
	ENG APPR.			
	MFG APPR.			
INTERPRET GEOMETRIC TOLERANCING PER: -	Q.A.			
MATERIAL Aluminum 5052-H32	COMMENTS:			SIZE D / DWG. NO. SIM_PMNT_W_TOP_001 / REV 1.0
FINISH -				
DO NOT SCALE DRAWING				SCALE: 1:1 / WEIGHT: / SHEET 1 OF 1

PROPRIETARY AND CONFIDENTIAL

THE INFORMATION CONTAINED IN THIS DRAWING IS THE SOLE PROPERTY OF THE FISSION VISION CAPSTONE GROUP. ANY REPRODUCTION IN PART OR AS A WHOLE WITHOUT THE WRITTEN PERMISSION OF THE FISSION VISION CAPSTONE GROUP IS PROHIBITED.

SOLIDWORKS Educational Product. For Instructional Use Only.

TOP

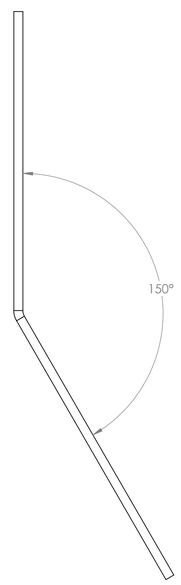

FLAT

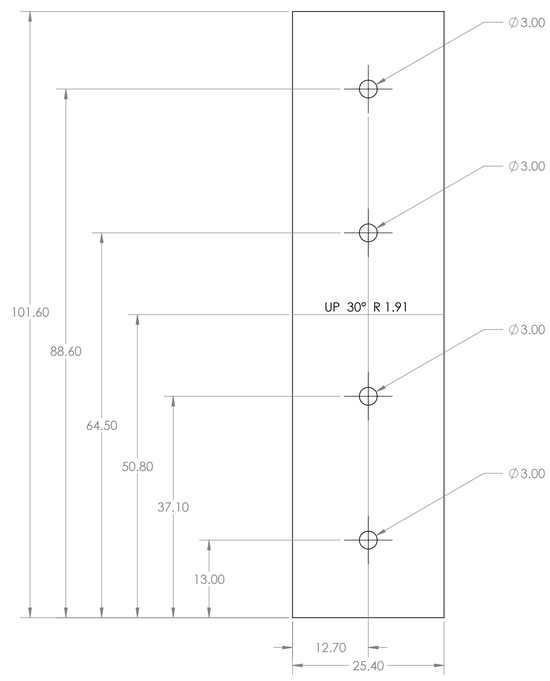

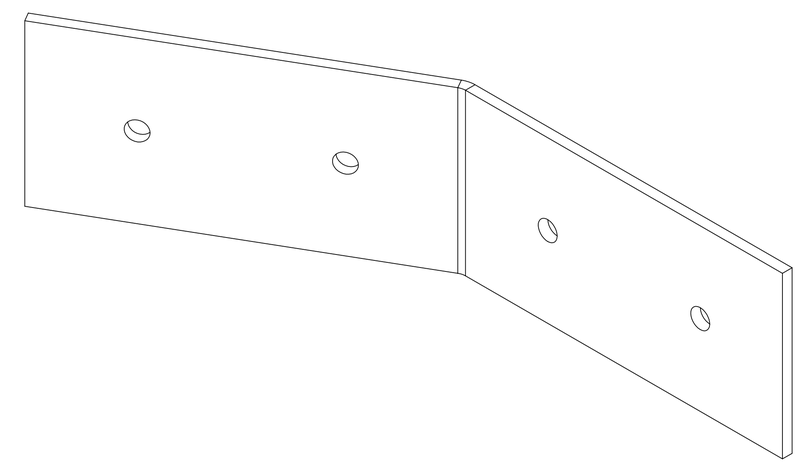

UNLESS OTHERWISE SPECIFIED:		NAME	DATE	UNIVERSITY OF SASKATCHEWAN - "FISSION VISION" ENGINEERING CAPSTONE GROUP
DIMENSIONS ARE IN MM	DRAWN	DJO639	04/04/26	TITLE: Nuclear Reactor Simulator Case
TOLERANCES: MACH ±0.01 mm BEND ±0.25 deg	CHECKED			
	ENG APPR.			
	MFG APPR.			
INTERPRET GEOMETRIC TOLERANCING PER: -	Q.A.			
MATERIAL: Aluminum 5052-H32	COMMENTS:			SIZE D / DWG. NO. SIM_BRACKET_001 / REV 1.0
FINISH -				
DO NOT SCALE DRAWING				SCALE: 2:1 WEIGHT: SHEET 1 OF 1

PROPRIETARY AND CONFIDENTIAL
THE INFORMATION CONTAINED IN THIS DRAWING IS THE SOLE PROPERTY OF THE FISSION VISION CAPSTONE GROUP. ANY REPRODUCTION IN PART OR AS A WHOLE WITHOUT THE WRITTEN PERMISSION OF THE FISSION VISION CAPSTONE GROUP IS PROHIBITED.

SOLIDWORKS Educational Product. For Instructional Use Only.